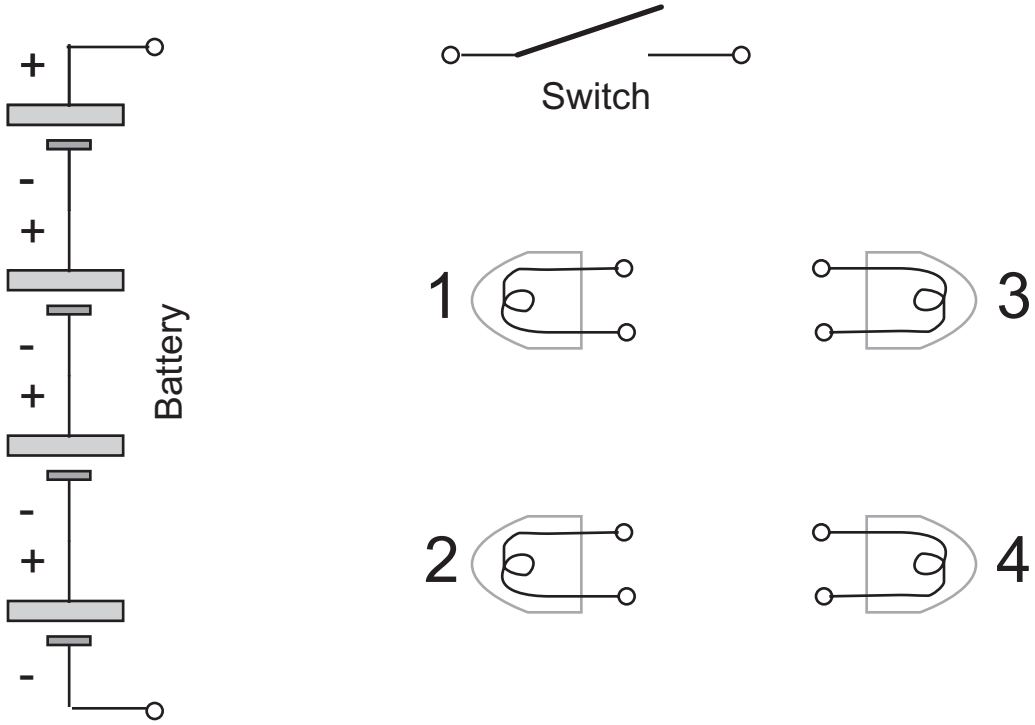

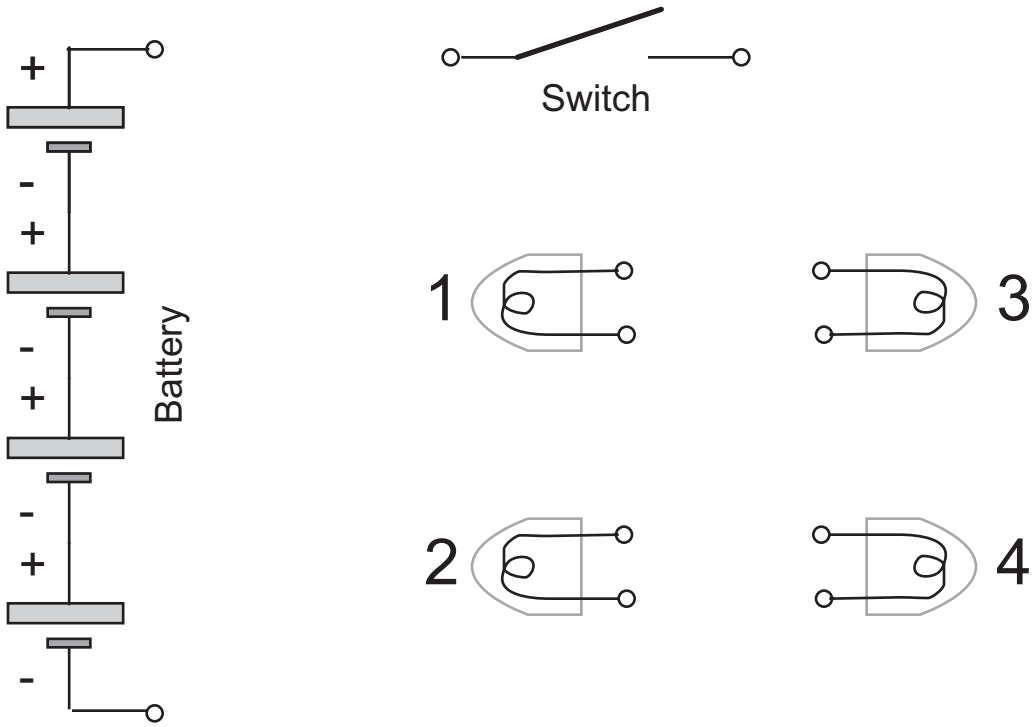

BY NC SA

4th grade switch & lights
Basic Electricity
http://www.lamacchia.us
r2